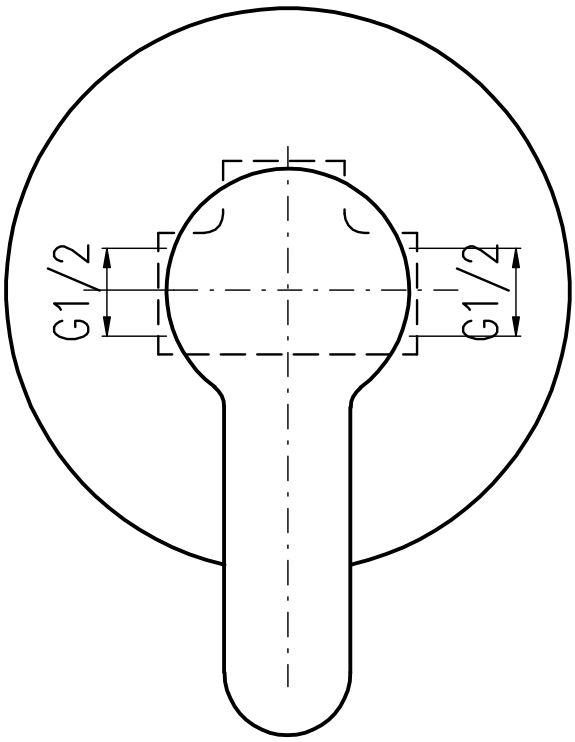
G1/2
G1/2

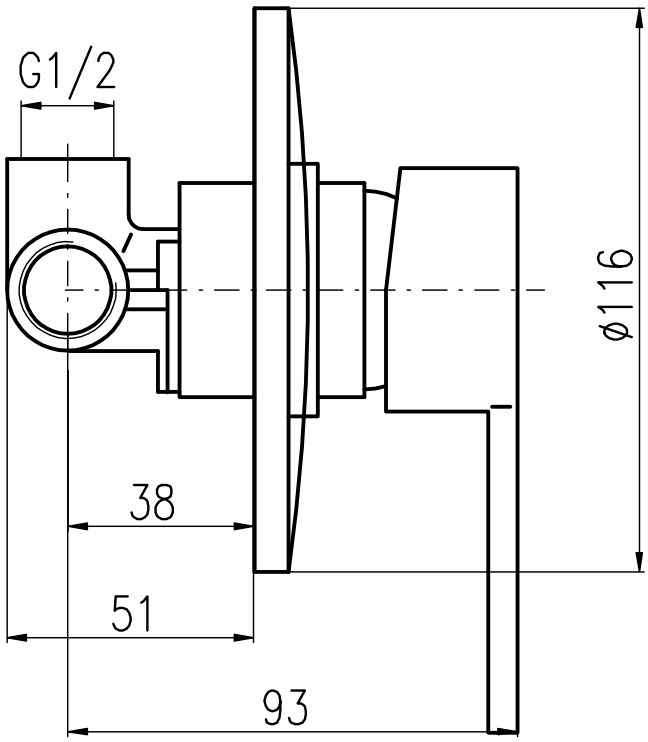
G1/2
ø116
38
51
93

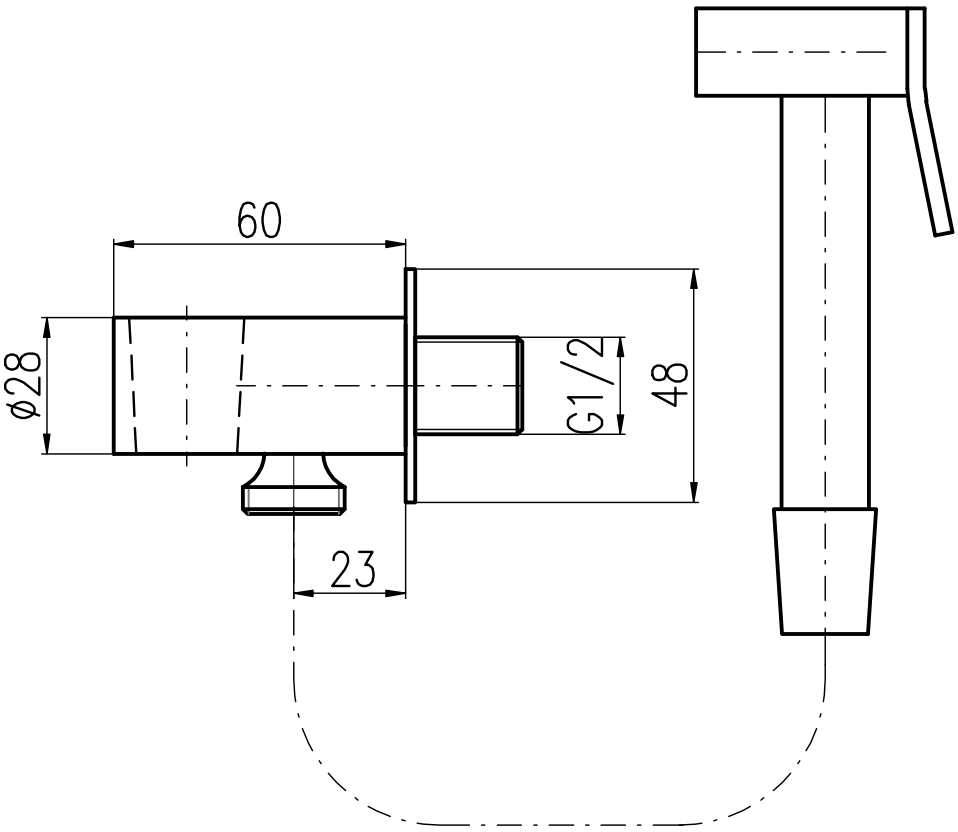
60
ø28
G1/2
48
23