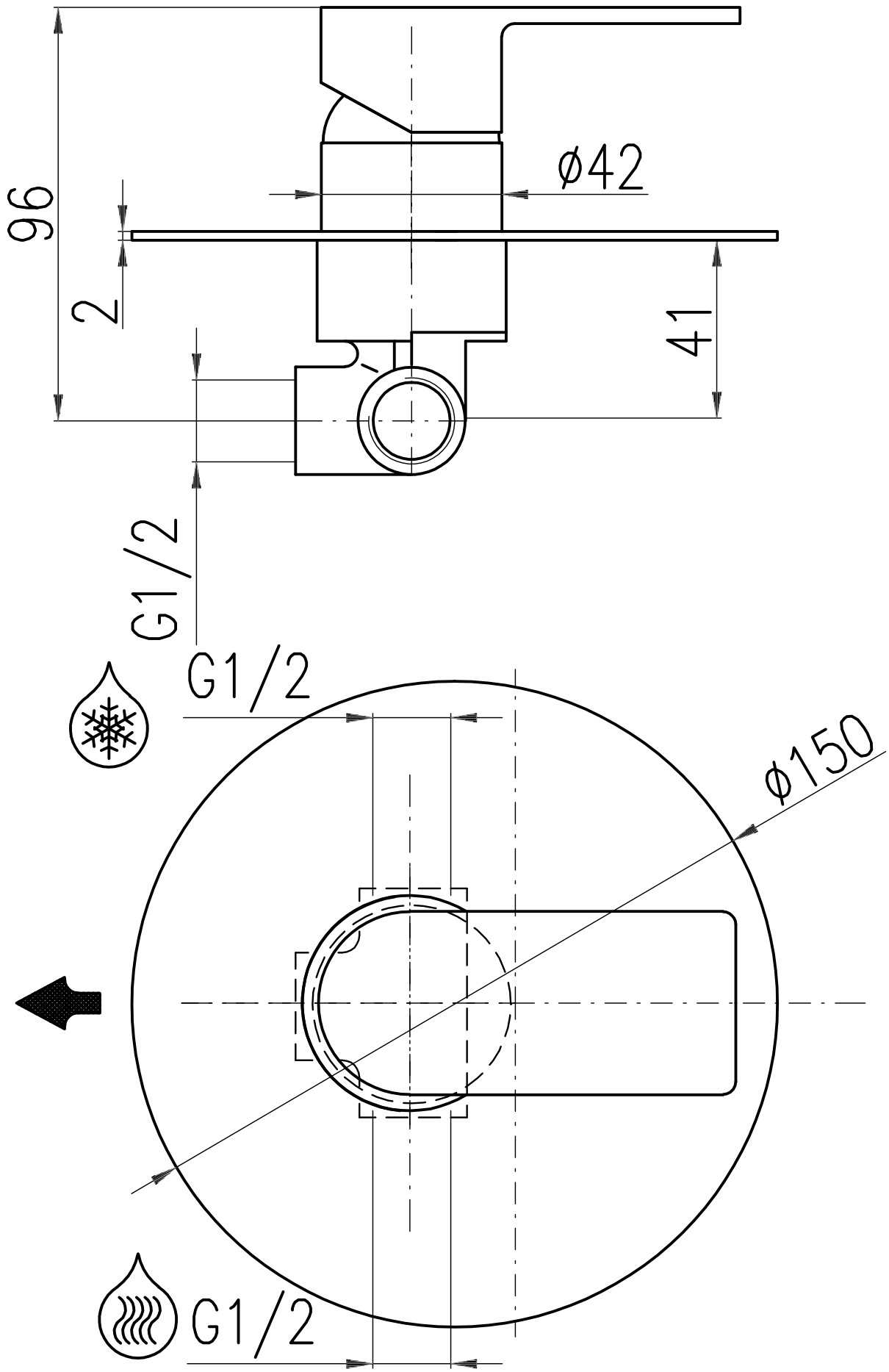
96
2
ø42
41
G1/2
G1/2
ø150
G1/2