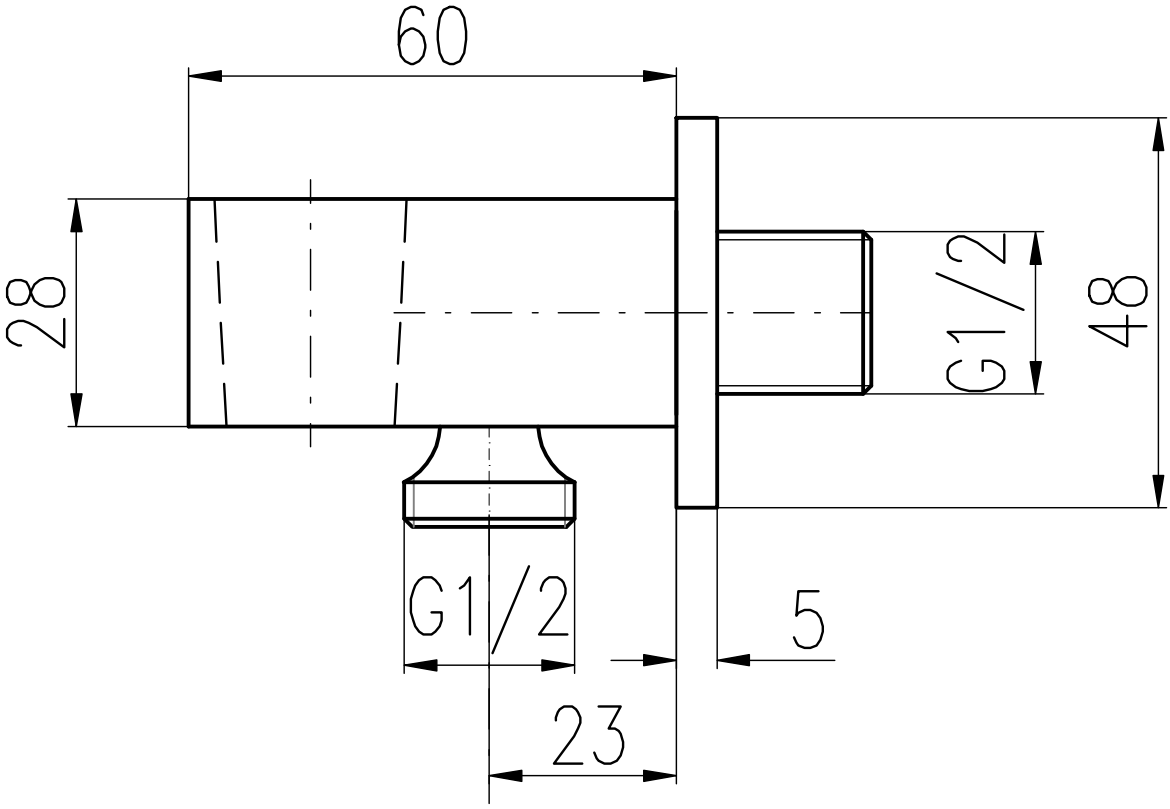
60
28
G1/2
48
G1/2
5
23

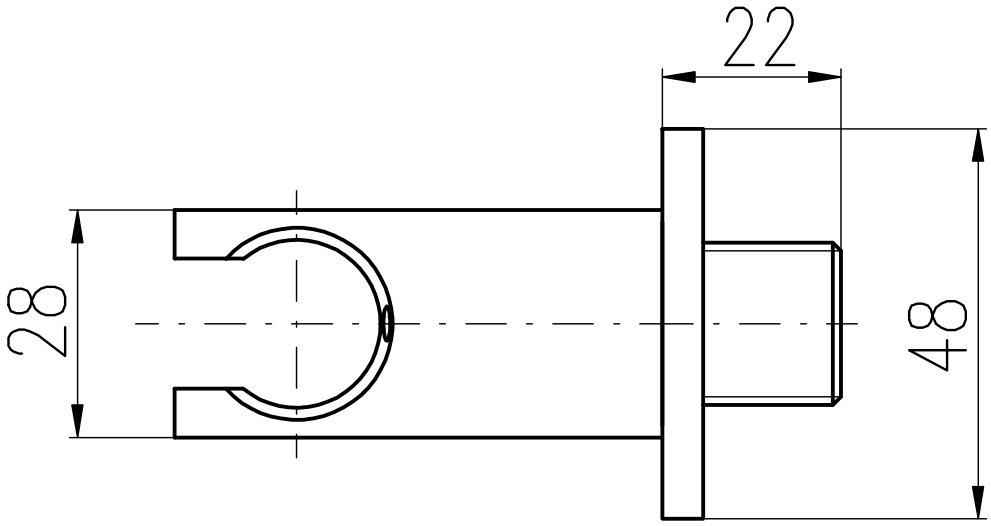
22
28
48